Exploded

H3002 Leg extension

please note :prats didn't demolitionde part
and fast eners not listde on the introduction

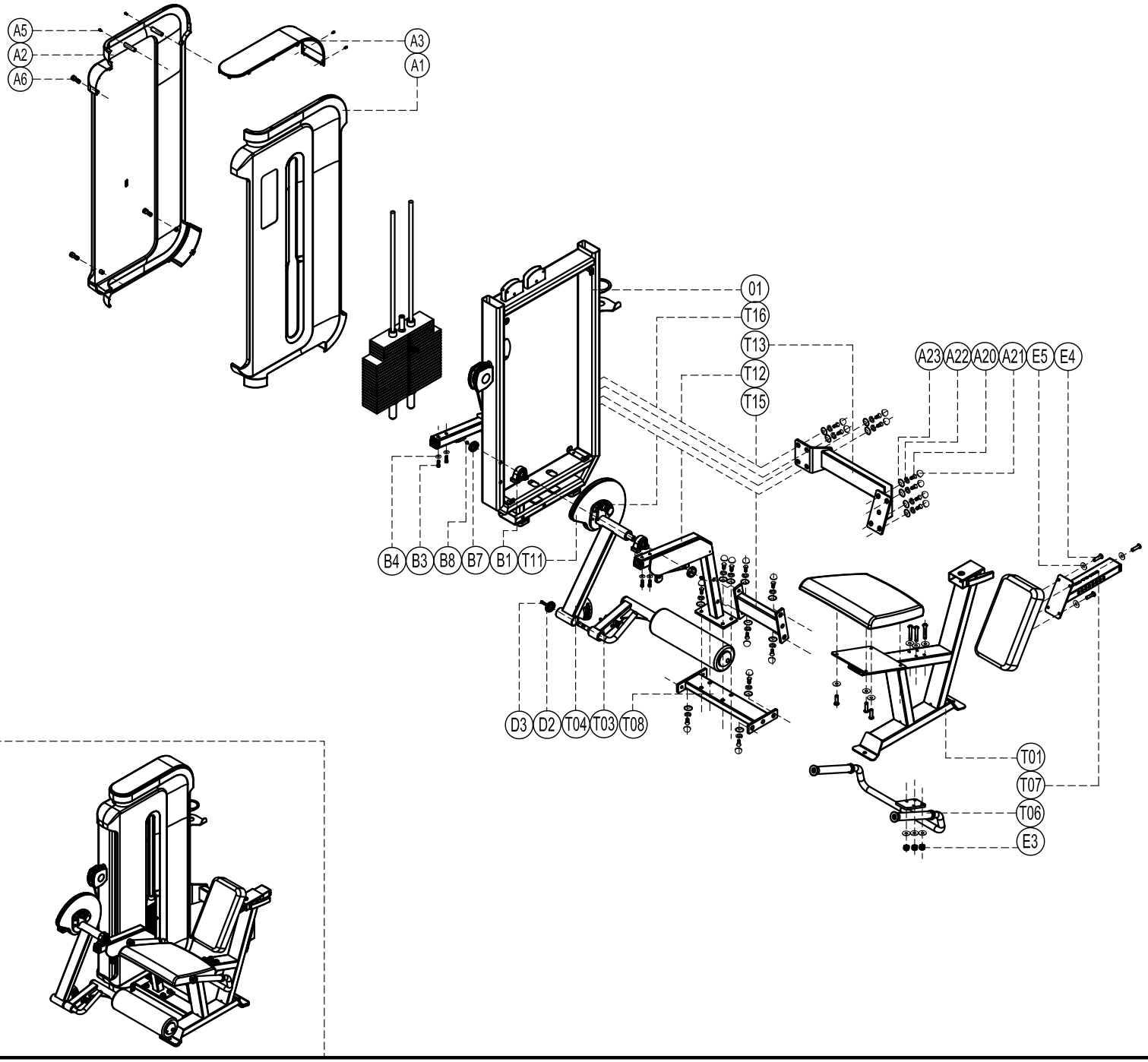

Number	Name	Quantity
E5	Flat washer φ8	8
E4	Cup head inner hex screw M8*35	8
E3	Self lock nut M10	4
E1	Cup head inner hex screw M10*75	4
D3	Socket Cap inner hex M8*16	1
D2	Aluminum top cover B038	1
B8	Sink inner hex screw M6*10	2
B7	Cover S264	2
B4	Flat washer φ10	12
B3	Cup head inner hex screw M8*65	4
B1	Bearing basement PA205	2
A23	Gasket DQ003	20
A22	Spring washer φ12	20
A21	Screw cap S208	20
A20	Outside hex screw M12*35	20
A6	Cup head inner hex screw M5*15	8
A5	Cup head cross tapping screw ST3*8	4
A3	Top cover	1
A2	Back shroud	1
A1	Front shroud	1
T16	Cam fixing set	1
T15	Horizontal connection set	1
T13	Back connection set	1
T12	Below connection	1
T08	Below connection	1
T07	Cushion adjustment	1
T06	Handle set	1
T11	Cam sets	1
T04	Movable arm set	1
T03	Leg pressing SET	1
01	Door frame	1
T01	Main frame	1